Uva Wellassa University, Sri Lanka
End Semester Examination – August 2011
SCT 161-1 Engineering Graphics

Time: Three (03) Hours

Total 02 Questions
Answer **all** questions
All dimensions are given in mm

1. Draw a sketch of the isometric view for the given object. (You will be provided with an object in the examination)

(20 marks)

2. Draw the front view, looking in the direction of arrow X, the top view and the left hand side view of the block shown in FigQ02. Use first angle method of projection.

(80 marks)

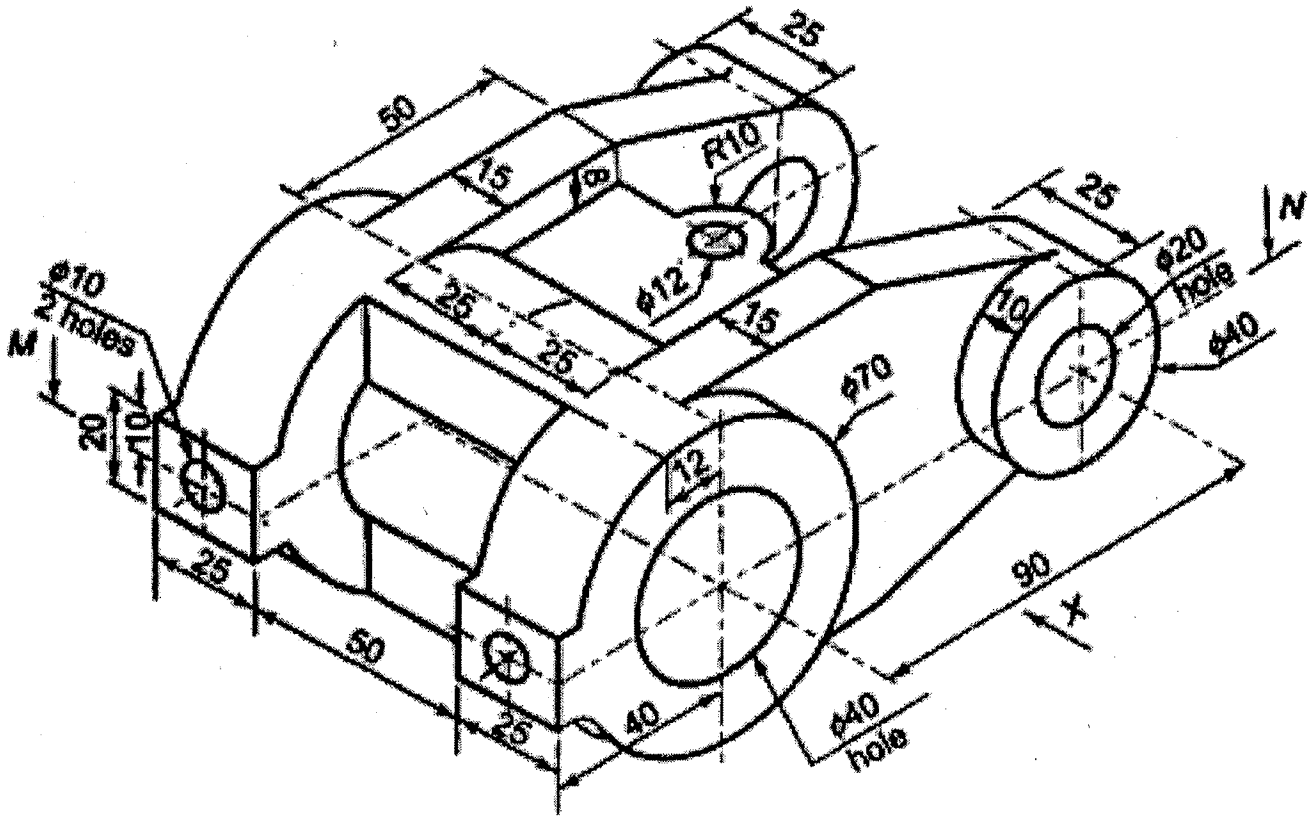

FigQ02